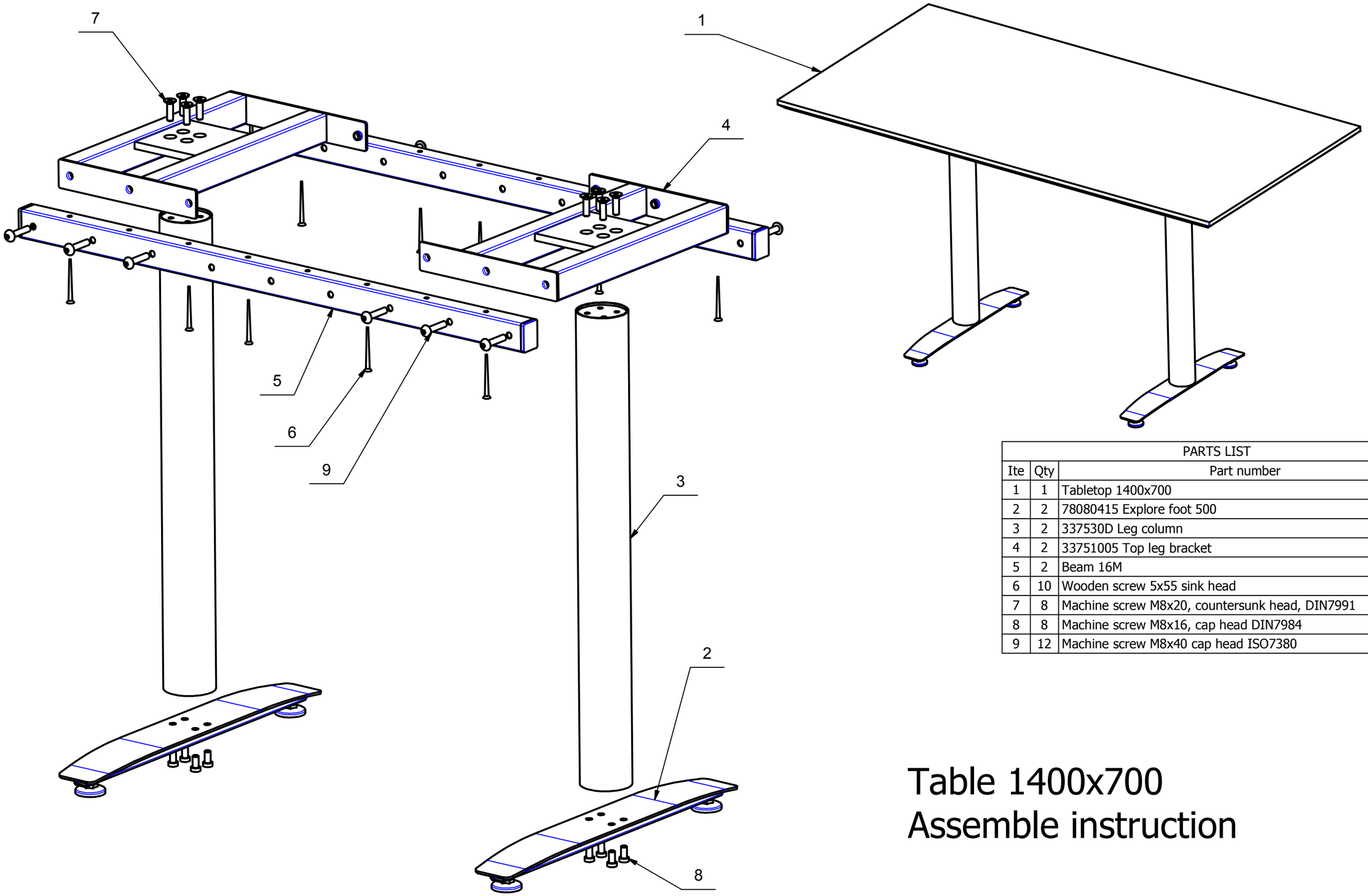

PARTS LIST		
Ite	Qty	Part number
1	1	Tabletop 1400x700
2	2	78080415 Explore foot 500
3	2	337530D Leg column
4	2	33751005 Top leg bracket
5	2	Beam 16M
6	10	Wooden screw 5x55 sink head
7	8	Machine screw M8x20, countersunk head, DIN7991
8	8	Machine screw M8x16, cap head DIN7984
9	12	Machine screw M8x40 cap head ISO7380

Table 1400x700
Assemble instruction