Svenheim

Tellus work desk mounting/dismounting instruction

1. **Tabletop:**
   Mounting: no mounting needed, only unpacking.
   Dismounting: no dismounting needed.
   Replacement: whole tabletop to be replaced.

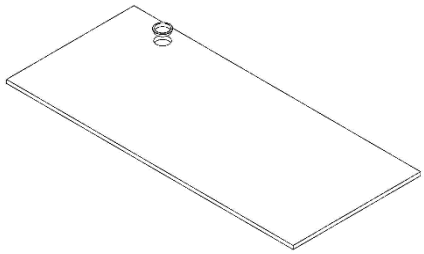

2. **Lid for cable hole:**
   Mounting: Free inserted, no mounting needed.
   Dismounting: Free removed, no dismounting needed.
   Replacement: Lid to be replaced.

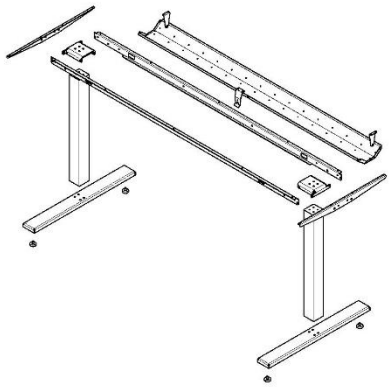

3. **Fixed height leg system incl. cable holder:**
   Mounting (detailed instruction in the package and on WEB):
   Cross beams, end profiles, cable holder to be fixed to tabletop with wood screws.
   Top leg brackets, legs, feet, cross beams, end profiles to be assembled with machine screws.
   Dismounting: with screwdriver.
   Replacement: any needed component to be replaced.

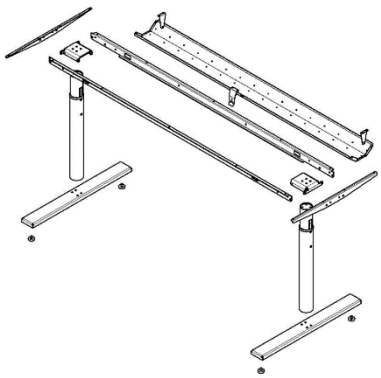

4. **Manual height adjustable leg system incl. cable holder:**
   Mounting (detailed instruction in the package and on WEB):
   Cross beams, end profiles, cable holder to be fixed to tabletop with wood screws.
   Top leg brackets, legs, feet, cross beams, end profiles to be assembled with machine screws.

   Height adjustment to be performed.
   Dismounting: with screwdriver.
   Replacement: any needed component to be replaced.

5. **Folding leg system with T- shape legs:**
   Mounting (detailed instruction in the package and on WEB)
   Legs with folding mechanism to be fixed to tabletop with wood screws.
   Dismounting: with screwdriver.
   Replacement: whole leg with folding mechanism to be replaced.

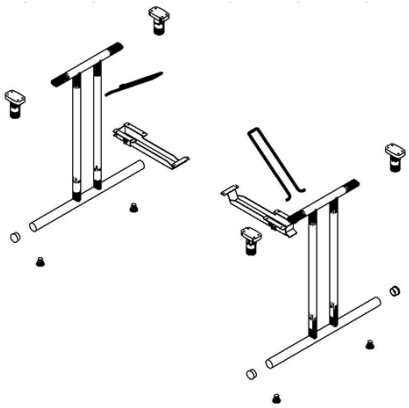

Svenheim
Naujoji str. 132 LT-62175 Alytus, Lithuania
www.svenheim.no
info@svenheim.no

6. **Folding leg system with U- shape legs:**

Mounting (detailed instruction on WEB)

Legs with folding mechanism to be fixed to tabletop with wood screws.

Dismounting: with screwdriver.

Replacement: leg to be replaced and folding mechanism to be replaced.

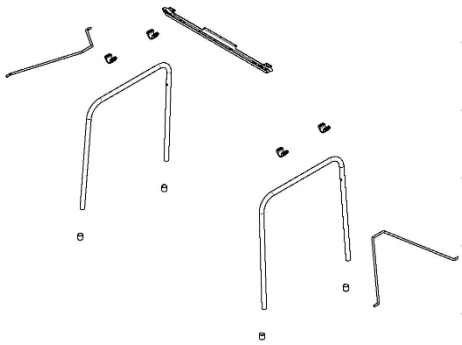

7. **Electrical height adjustable leg system incl. cable holder:**

Mounting (detailed instruction in the package and on WEB):

Control box, cross beams, end profiles, cable holder to be fixed to tabletop with wood screws.

Legs, feet, cross beams, end profiles to be assembled with machine screws.

Height adjustment: electronic to be connected, initialization to be performed.

Dismounting: with screwdriver.

Trouble shooting: Iin case of malfunction trouble shooting performed according to trouble shooting guide (in the package and on WEB).

Replacement: any needed component to be replaced.

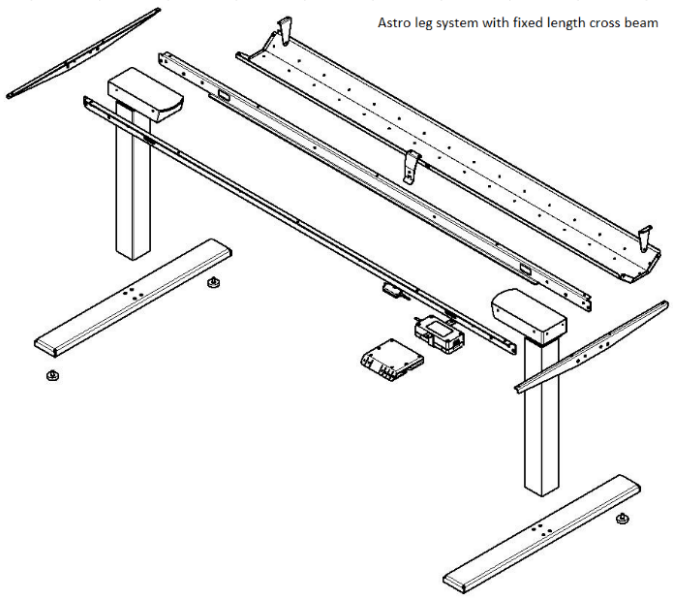

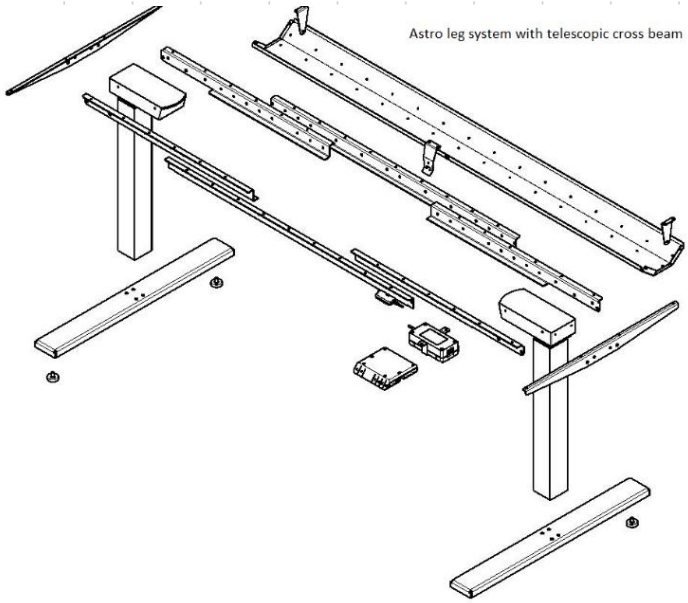

Svenheim
Naujoji str. 132 LT-62175 Alytus, Lithuania
www.svenheim.no
info@svenheim.no

Svenheim

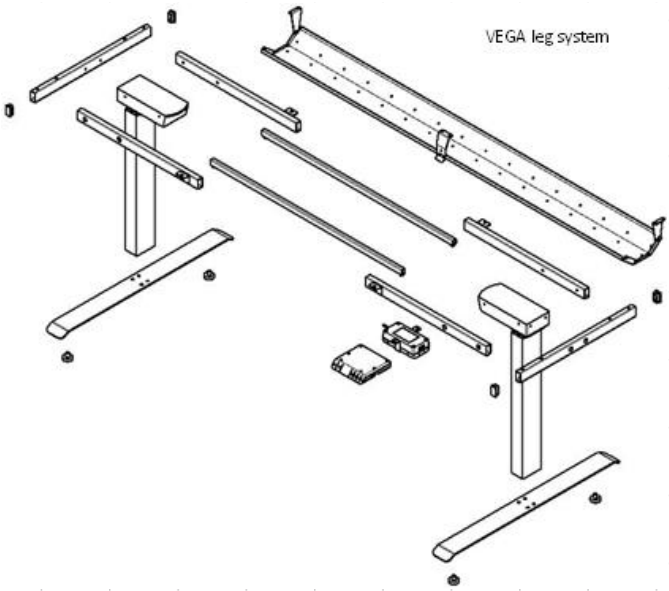

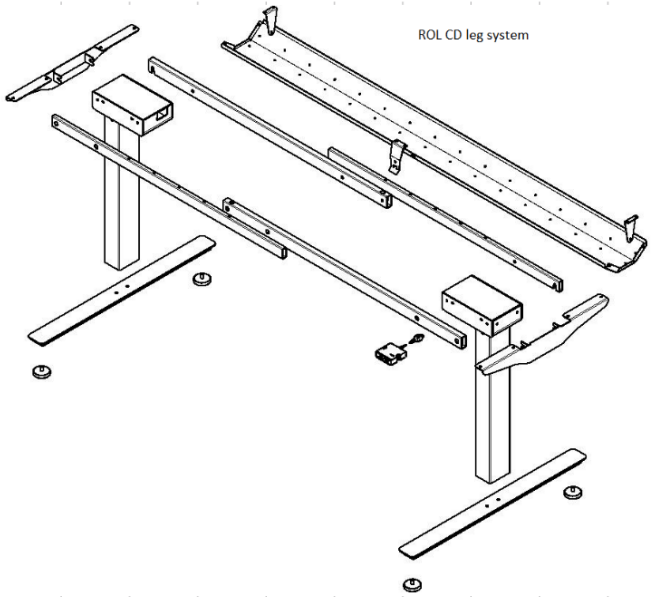

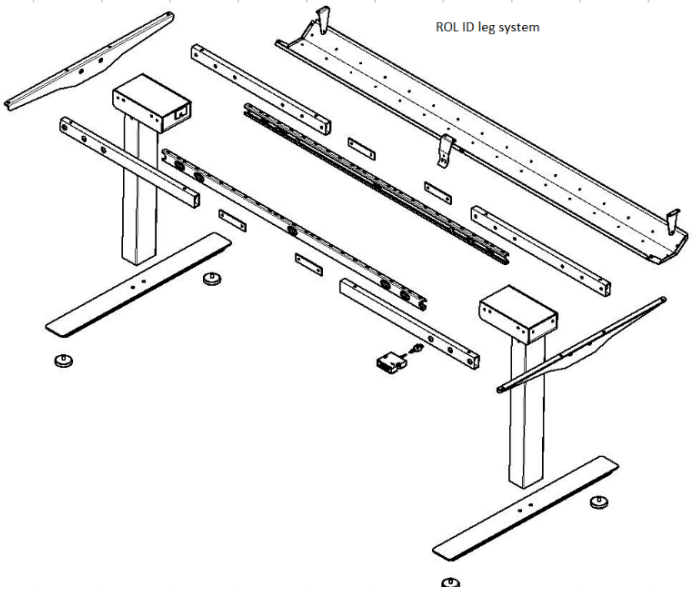

Svenheim
Naujoji str. 132 LT-62175 Alytus, Lithuania
www.svenheim.no
info@svenheim.no