Svenheim

Iris storage mounting/dismounting instruction

1. **Cabinet carcass:**
   Mounting: wooden dowels and glue at the factory.
   Dismounting: hammer.
   Replacement: whole carcass to be replaced.

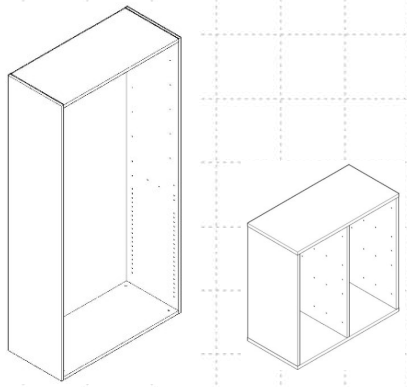

2. **Shelves/partitions:**
   Mounting: Toolex fittings at the factory.
   Dismounting: screwdriver.
   Replacement: any needed component to be replaced.

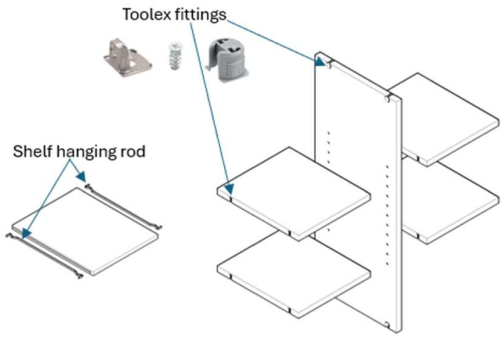

3. **Cabinet fronts/drawers/handles/locks:**

   Mounting:
   Fronts and drawers are mounted with screws at the factory.
   The lock and lock system are mounted with screws at the factory.
   Handles mounted with screws on customer's site.
   Dismounting: with screwdriver.
   Replacement: any needed component to be replaced.

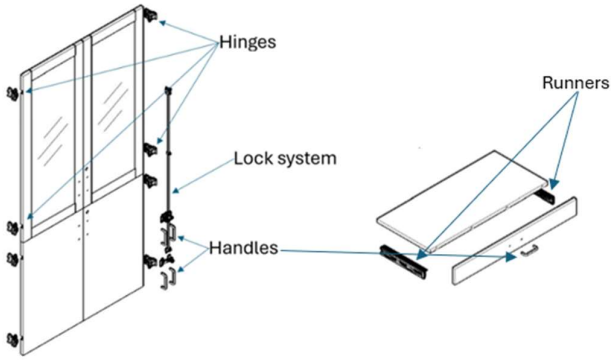

Svenheim
Naujoji str. 132 LT-62175 Alytus, Lithuania
www.svenheim.no
info@svenheim.no

4. **Doors with glass:**
   Mounting: Wooden frame is glued with dowels, glass is inserted and tightened with glass tightening stripes at the factory.
   Dismounting: glass tightening stripes to be removed and glass taken away without tools.
   Replacement: any needed component to be replaced.

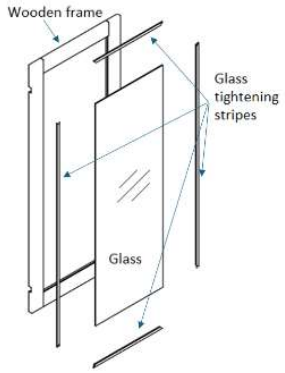

5. **Cabinet socket or wheels:**
   Mounting: Sockets are mounted with wooden dowels and glue at the factory. Excentric fittings are used for mounting the socket to the cabinet carcass. Wheels mounted with screws on customer's site. Legs for cabinet without bottom are mounted at the factory. Dismounting: Sockets to be removed with screwdriver by loosening the excentric fitting.
   Wheels to be removed with screwdriver.
   Socket dismounted by using hammer.
   Legs for cabinet without bottom removed without tools.
   Replacement: Socket to be replaced as a whole unit, any other needed component to be replaced.

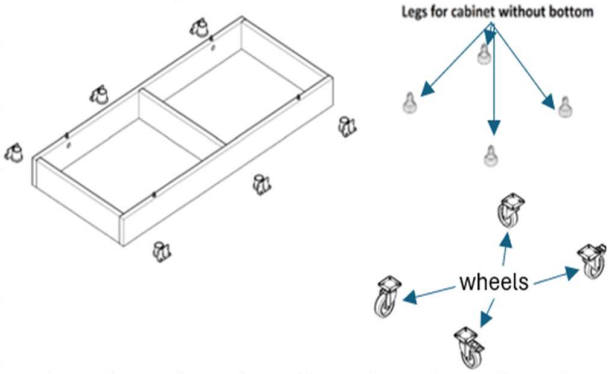

6. **Pupils cabinet with plastic boxes:**
   Mounting: Box on wheels - wooden dowels and glue at the factory. Runners for plastic boxes are screwed with screws at the factory. Plastic boxes are inserted at the factory. Wheels mounted with screws on customer's site.
   Dismounting: Remove the box on wheels and plastic boxes. Dismount shelves/partitions by loosening the toolex, carcass by hammer, fittings by screwdriver.
   Replacement: carcass to be replaced as a whole unit, any other needed component to be replaced.

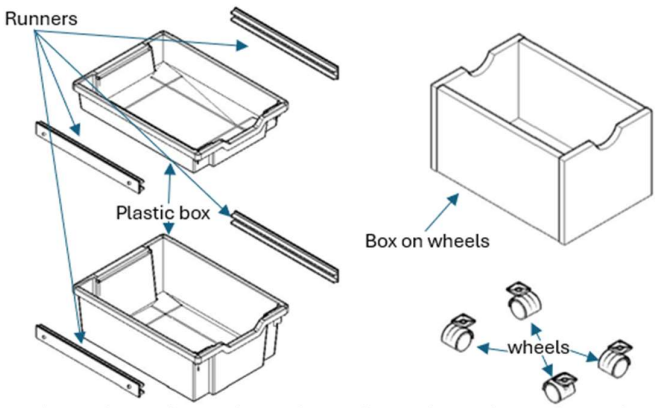

Svenheim
Naujoji str. 132 LT-62175 Alytus, Lithuania
www.svenheim.no
info@svenheim.no