Meeting tables (Factor/Factor Lite/Optima/Optima lite) mounting/dismounting instruction

1. **A. Whole tabletop:**
   Mounting : no mounting needed, only unpacking.
   Dismounting : no dismounting needed.
   Replacement : whole tabletop to be replaced.

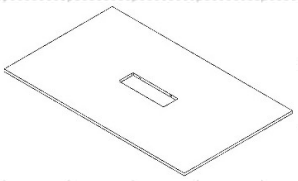

   B. 2-divided tabletop :
   Mounting : lamello dowels to be inserted ; parts to be tightened together with worktop connector by hexagon key.
   Dismounting : worktop connector to be loosened by hexagon key.
   Replacement : separate parts or fittings to be replaced.

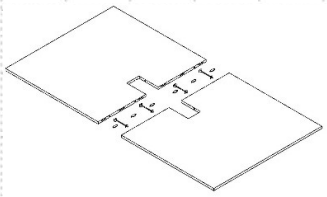

2. **Wooden lid with cable holder for meeting table :**
   Mounting : Hinges to de fastened in predrilled holes in tabletop and lid by screw driver. Amortization spacer to be installed in the milled place on the backside of tabletop by screw driver. Cable holder to be installed with wood screws by screw driver.
   Dismounting : Hinges, spacer and cable holder to be loosened with screw driver.
   Replacement : Separate part of lids or fittings to be replaced.

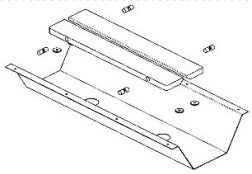

3. **Leg system:**
   Mounting (detailed instruction in the package and on WEB):
   A. Factor Lite
      Cross beams and legs to be fixed to tabletop with wood screws.
   B. Factor
      Cross beams and legs to be fixed to tabletop with wood screws. Legs to beams, beams between each other, cross beams with end profiles to be assembled together with machine screws.

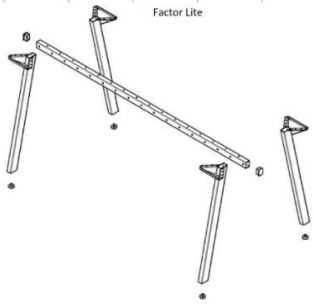

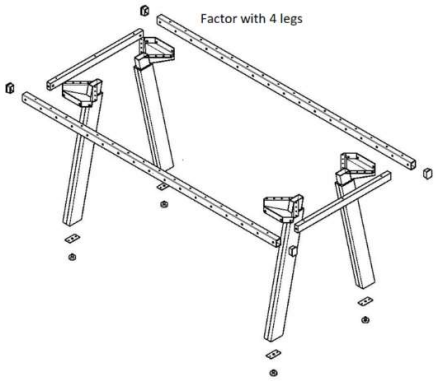

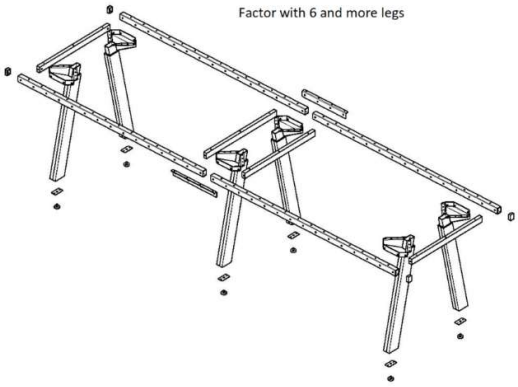

Svenheim
Naujoji str. 132 LT-62175 Alytus, Lithuania
www.svenheim.no
info@svenheim.no

C. Optima and Optima Lite

Cross beams and end profiles to be fixed to tabletop with wood screws. Top leg fitting, leg, feet to be assembled together with machine screws.

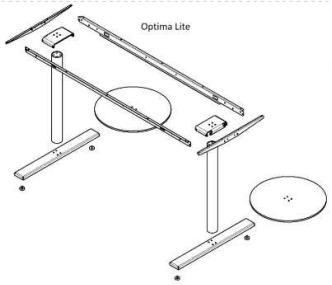

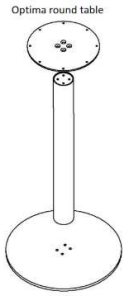

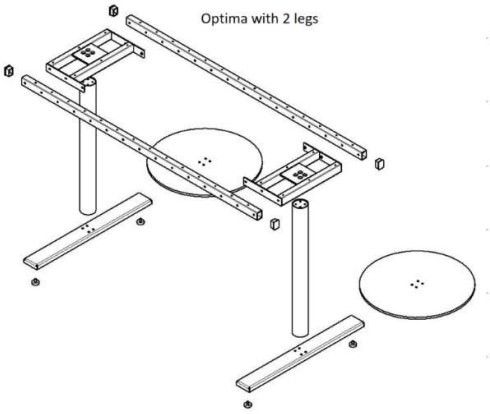

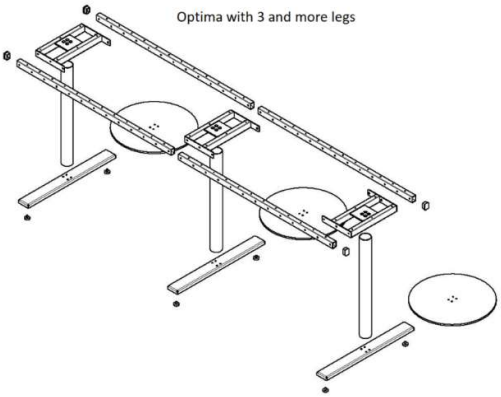

Dismounting : All fittings to be loosened with screw driver, regulation screws removed from legs or feet manually, plastic ends of metal beams to be removed manually.

Replacement : any needed component to be replaced.

Svenheim
Naujoji str. 132 LT-62175 Alytus, Lithuania
www.svenheim.no
info@svenheim.no