Svenheim

CHAT

www.svenheim.no

PRODUCT INFORMATION

Socializing is one of the main points to create the good atmosphere. It can be everything from small coffee talk to sharing big ideas with colleagues or customers.
Our CHAT bartable and bench suits perfectly for those needs. It allows you to choose dimensions, decors, variation of materials as well as functional add-on solutions.

STANDARD DECORS

HPL

White (W980)
Grey (U708)
Anthracite grey
Black matt Fenix 0720
Beech
Birch
Ash
Amber Oak

OTHER

Other Linoleum DT
Other Formica and HPL

LINOLEUM

Mushroom DT4176 linoleum
Ash DT4132 linoleum
Pebble DT4175 linoleum
Charcoal DT4166 linoelum
Nero DT4023 linoelum

VENEER

Beech veneer
Birch veneer
Oak veneer
Ash veneer
White-pigmented ash veneer
Black stained oak veneer

Core material - MDF, Plywood, MFC.
Thickness of core material - 21, 22, 24, 25, 28, 38mm.
Variations - bench, bartable, bartable 2-divided.
Edge - straight edge of ABS, veneer or lacquered.
Corner joint - 90 or 45 degrees angle.
Bartable can be without or with stainless steel footrest.

Bartable height - 70, 74, 80, 85, 90, 95, 100, 105, 110 cm.
Bench height - 40, 45, 50 cm.

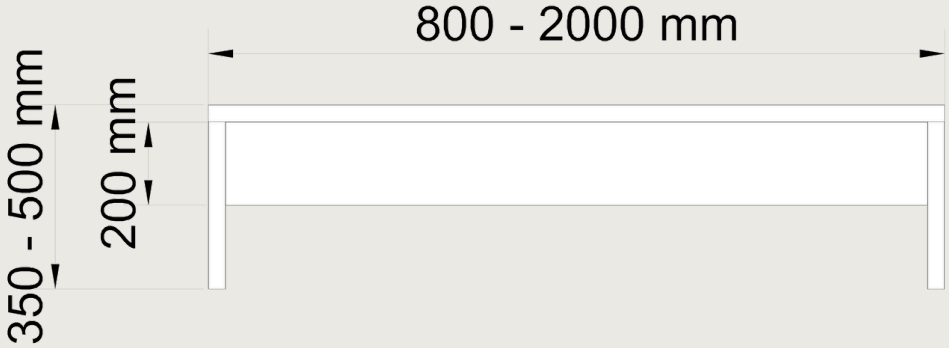
800 - 2000 mm
350 - 500 mm
200 mm

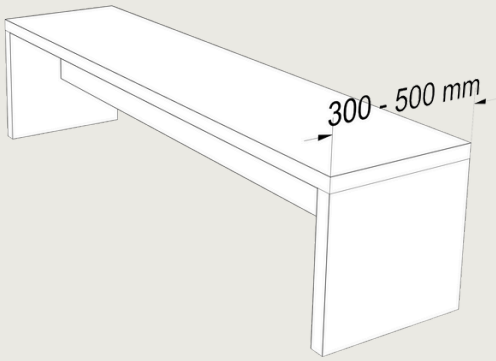
300 - 500 mm

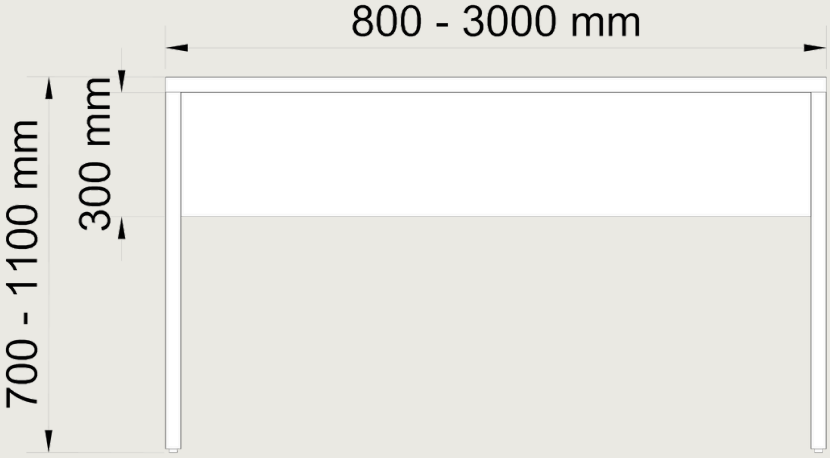
800 - 3000 mm
700 - 1100 mm
300 mm

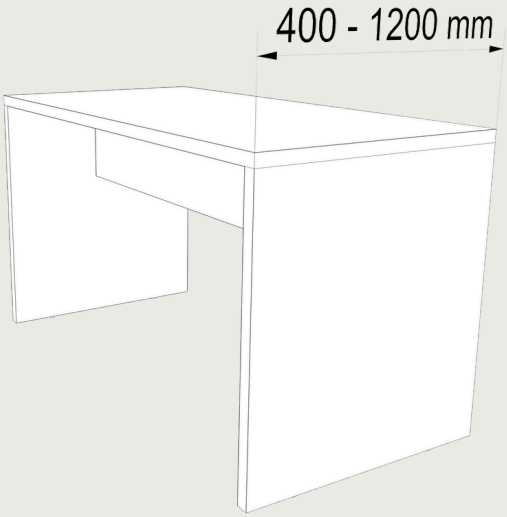
400 - 1200 mm

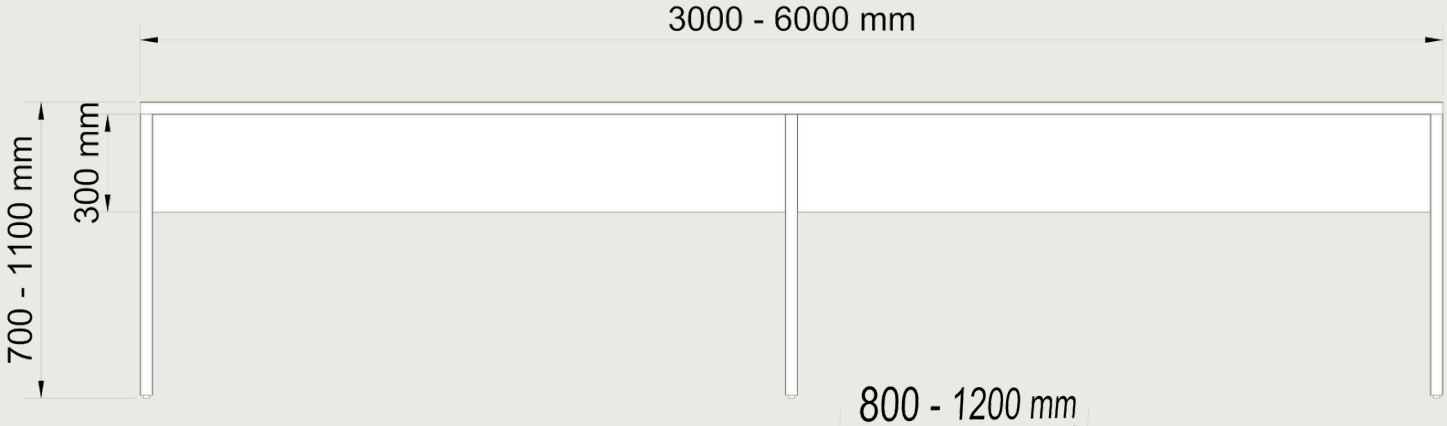
3000 - 6000 mm
700 - 1100 mm
300 mm

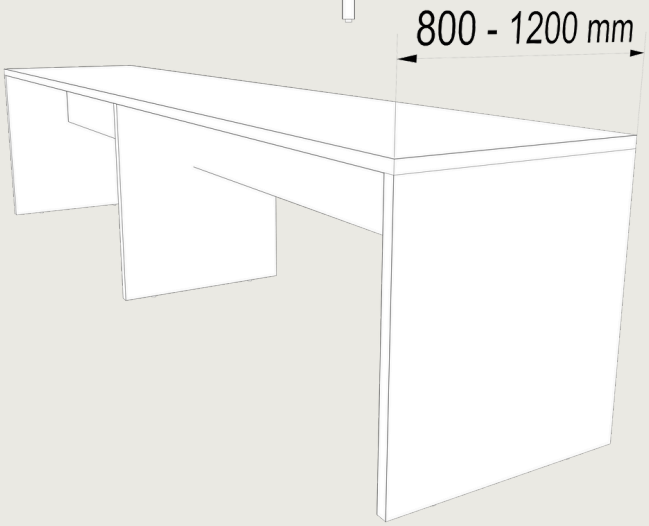
800 - 1200 mm

CLEANING AND MAINTENANCE

GENERAL

Svenheim uses materials and surfaces that are resistant. No special maintenance beyond normal is required cleaning. Recommended cleaning method is cloth soaked in slightly warm water with a mild synthetic detergent. Avoid green soap or substances containing ammonia. Do not use solvents or cleaning detergents with abrasive / scouring powder.

POWDER COATED STEEL COMPONENTS

Used for table footrest. Clean as under «general» suggestions. Difficult stains are removed with chemical gasoline. Do not use solvents or cleaners with abrasive / scouring powder. Installation instructions for base are enclosed.

RECYCLING

Sorting is a natural part of Svenheim's production and material handling. Steel components included in our products are 100% recyclable. Plates from Svenheim can be recycled as heat at approved heating systems. Plastic and metal is delivered to approved environmental stations. Svenheim is a member of the return schemes Green Dot Norway for packaging and Eurovironment (Electrical return) for electrical components.

®

For orders and other questions please contact us at:
e-mail: post@svenheim.no or visit our website - www.svenheim.no