Svenheim

KopiPrint bench and wall cabinets mounting/dismounting instruction

1. **Carcass bench cabinet:**
   Mounting:
   Carcass mounted with wooden dowels and glue at the factory.
   Metal support fixed with screws at the factory.
   Dismounting:
   Metal support loosened by screwdriver.
   Carcass dismounted by hammer.
   Replacement:
   Whole carcass to be replaced. Metal support can be replaced separately.

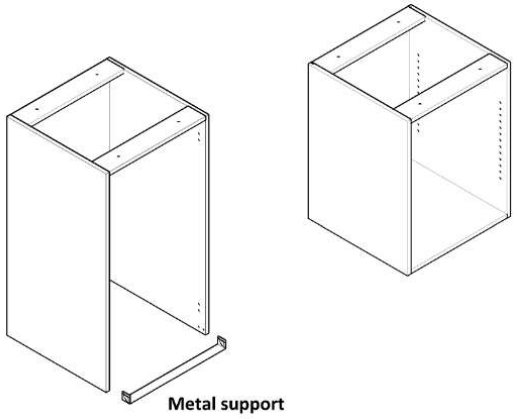

2. **Carcass wall cabinet:**
   Mounting:
   Carcass mounted with wooden dowels and glue at the factory.
   Wall hanging fittings mounted with screws at the factory.
   Wall fixing list to be fixed to the wall with screws at customer's site.
   Carcass to be hanged without tools.
   Dismounting:
   Wall fixing list and wall fixing fittings loosened by screwdriver.
   Carcass dismounted by hammer.
   Replacement:
   Whole carcass to be replaced. Wall fixing list and wall fixing fittings can be replaced separately.

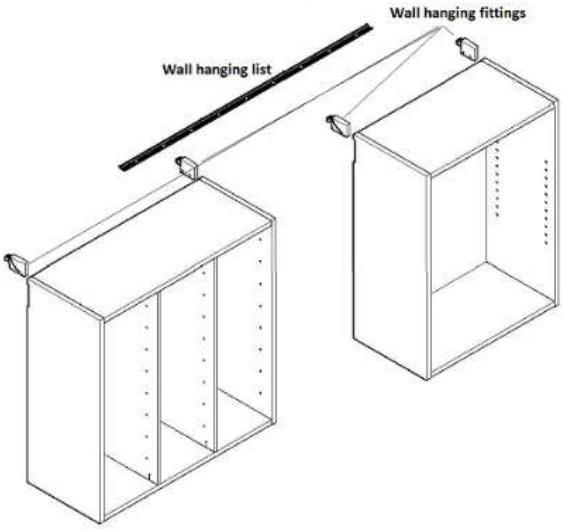

3. **Shelves/partitions:**
   Mounting: Toolex fittings or shelf hanging rods at the factory.
   Dismounting: Toolex fittings loosened by screwdriver.
   Shelf hanging rods removed without tools.
   Replacement: any needed component can replaced.

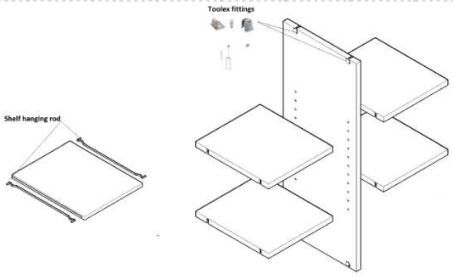

Svenheim
Naujoji str. 132 LT-62175 Alytus, Lithuania
www.svenheim.no
info@svenheim.no

4. **Fronts and handles:**
   Mounting:
   Fronts mounted with screws at the factory.
   Handles mounted with screws on customer's site.
   Dismounting: all parts loosened with screwdriver.
   Replacement: any needed component can replaced.

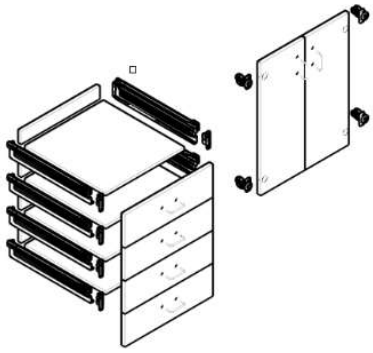

5. **Benchtop and side / front covers**
   Mounting:
   Benchtop mounted on the top of bench cabinets at customer's site with screws.
   Side cover mounted on the side of cabinets at customer's site with screws.
   Front cover assembled with Minifix fittings into L-shape solution and mounted on cabinet side with screws on customer's site.
   Dismounting : all parts loosened with screw driver.
   Replacement : any needed component to be replaced

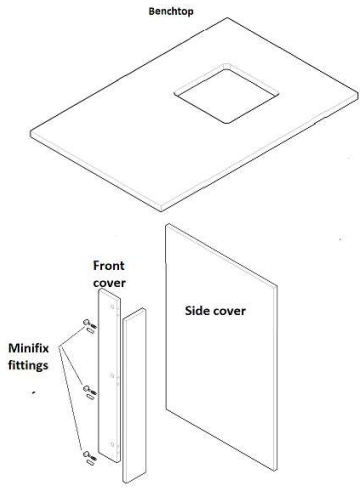

6. **Cabinet base**

   Mounting:
   Legs mounted on the bottom of cabinet at customer's site with screws.
   Clips mounted on the socket parts at customer's site with screws.
   Socket parts with clips added on legs without tools.
   Legs for cabinet without bottom are mounted at the factory.
   Dismounting:
   Socket parts with clips removed from legs without tools
   Clips and legs loosened from the cabinet with screwdriver
   Legs for cabinet without bottom removed without tools.
   Replacement : any needed component to be replaced.

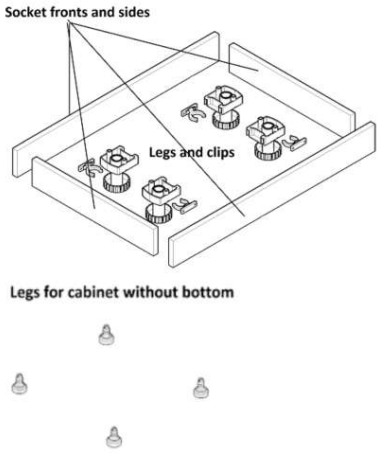

Svenheim
Naujoji str. 132 LT-62175 Alytus, Lithuania
www.svenheim.no
info@svenheim.no