Svenheim

Acoustic Vesta, Vesta Lite table and Vesta floor screen mounting/dismounting instruction

1. **Table screen mounting on tabletop:**
   Mounting: Angle or clamp brackets to be fixed to the screen with machine screws by screwdriver. Screen to be fixed to the tabletop with wood screws by screwdriver.
   Dismounting: Machine screws and wood screws to be loosened by screwdriver. Textile cover to be removed by opening zipper on the bottom side of the screen.
   Replacement: textile cover, and fixing parts can be replaced separately.

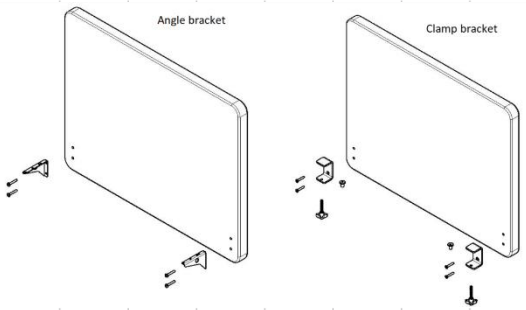

2. **Floor standing screen:**
   Mounting:
   Feet to be inserted into the holes in the bottom part of the screen and tightened with wood screws by screwdriver.
   Dismounting:
   Wood screw to be loosened by screwdriver and feet to be removed.
   Replacement: Feet can be replaced separately.

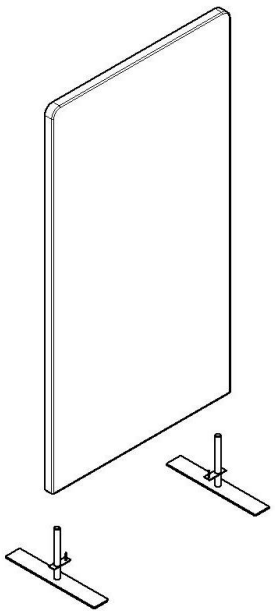

Svenheim
Naujoji str. 132 LT-62175 Alytus, Lithuania
www.svenheim.no
info@svenheim.no