Svenheim

Iris desk mounting/dismounting instruction

1. **Pupil's desk:**
   Mounting: tabletop fixed to the frame with wood screws.
   Dismounting: tabletop need to be loosened by screwdriver, adjustable feet to be unscrewed, plastic cap to be removed.
   Replacement: whole tabletop and whole metal frame to be replaced.

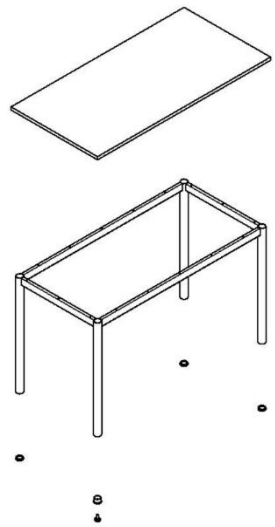

2. **Teacher's desk:**
   Mounting: legs fixed to the frame with screws. Tabletop and front panel fixed to the frame with wood screws. Drawer unit fixed to the frame with screws.
   Dismounting: Drawer unit, tabletop and front panel to be loosened by screwdriver, legs unscrewed with screwdriver, adjustable feet to be unscrewed, plastic cap to be removed. Drawers to be removed, fittings to be loosened, carcass dismounted by using hammer.
   Replacement: any needed component to be replaced, carcass of drawer unit need to be replaced as a whole unit.

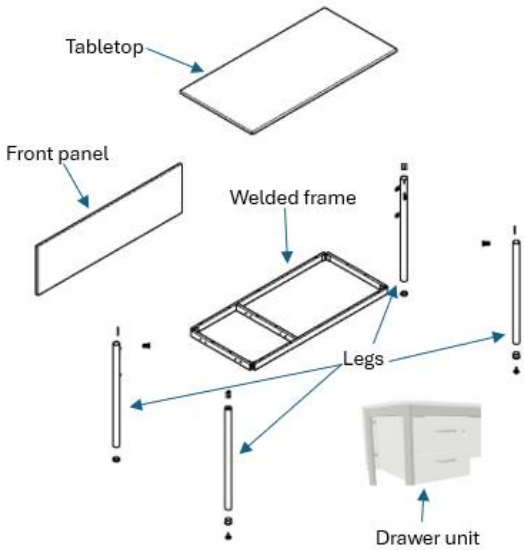

Svenheim
Naujoji str. 132 LT-62175 Alytus, Lithuania
www.svenheim.no
info@svenheim.no

3. **Mobile teachers' desk**:
Mounting: Carcass - wooden dowels and glue at the factory, shelves – toolex fittings at the factory. Fronts and drawers are mounted with screws at the factory. Runner and rolling door are inserted at the factory. Lock is mounted with screws at the factory. Handles and wheels are mounted with screws on the customer's site. Extra tabletop and side shelf are mounted with screws on customer site.

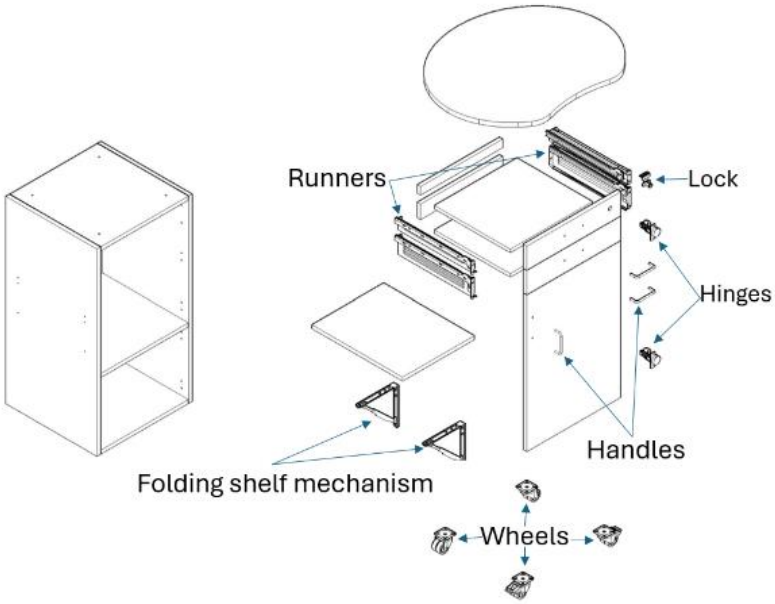

Dismounting: Remove fronts and drawers, dismount shelves by loosening the toolex, extra table top and side shelf are loosened by screwdriver carcass by hammer, fittings by screwdriver.
Replacement: carcass to be replaced as a whole unit, any other needed component to be replaced.

Svenheim
Naujoji str. 132 LT-62175 Alytus, Lithuania
www.svenheim.no
info@svenheim.no