Svenheim

LEG SYSTEMS DIFFERENCES MAP

This document showcases three unique height-adjustable leg systems, each with different features and functionalities tailored to various needs.
First page - technical information, other pages - visual information.

Leg system	**VEGA**	**ASTRO***	**ROL ID**
Stroke (including 22mm tabletop)	**650mm** 640-1290mm	**650mm** 625-1275mm	**650mm** 640-1290mm
Fits tabletop (visual information in the next pages)	**1150-1800mm** (telescopic beams)	**800-2400mm** (fixed beams) **1400-2200mm** (telescopic beams) **1600-2000mm** (zigzag beams)	**800-2000mm** (telescopic beams) **1600-2200mm** (zigzag beams)
Amount of legs	**2**	**2, 3, 4****	**2, 3**
Column shape and size	**Rectangular - 80x50mm**	**Square - 70x70mm**	**Rectangular - 80x60mm** **Round - ∅80mm**
Feet shape and size (visual information in the next pages)	**Flat bended tip** **738mm** (centric)	**Skirt** **500, 700, 900mm** (centric) **700, 900mm** (excentric)	**Flat** **500, 700, 900mm** (centric)
Color			
Load	**100 kg**	**100 kg**	**120 kg**
Speed	**32mm/s**	**32mm/s**	**32-40mm/s**
Noise dB	**~42dB**	**~42dB**	**<48dB, <38dB**
Standby power consumption	**≤0.3W**	**≤0.3W**	**0.45W**
Display (visual information in the next pages)	**Digital** (with memory settings and USB-charger)	**Digital** (with memory settings and USB-charger) **Button** (for 3 leg system)	**Button**
Warranty	**5 years**	**5 years**	**5 years**
Certifications	**Möbelfakta** **EPD**	**Möbelfakta** **EPD** **CE-certificated with Tellus work table**	**Möbelfakta** **EPD**

*** Astro leg system is also available with fixed and manually adjustable height (200mm reg.) and features the same design as the Optima conference table.**
****Astro can be customized to a 4 leg system on special request.**

VEGA

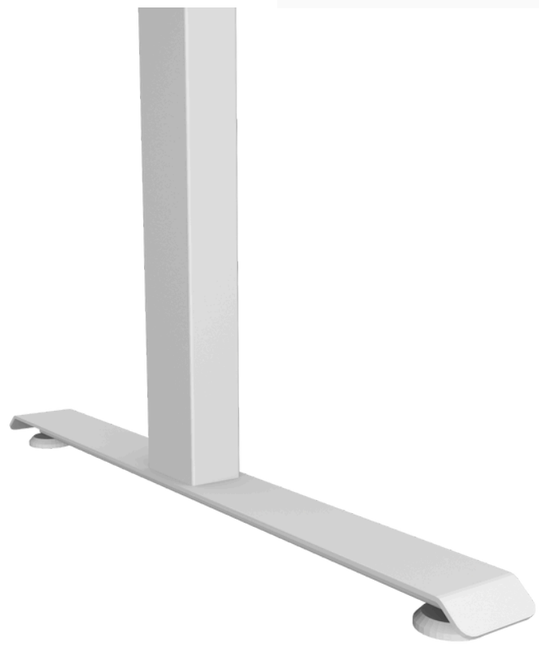

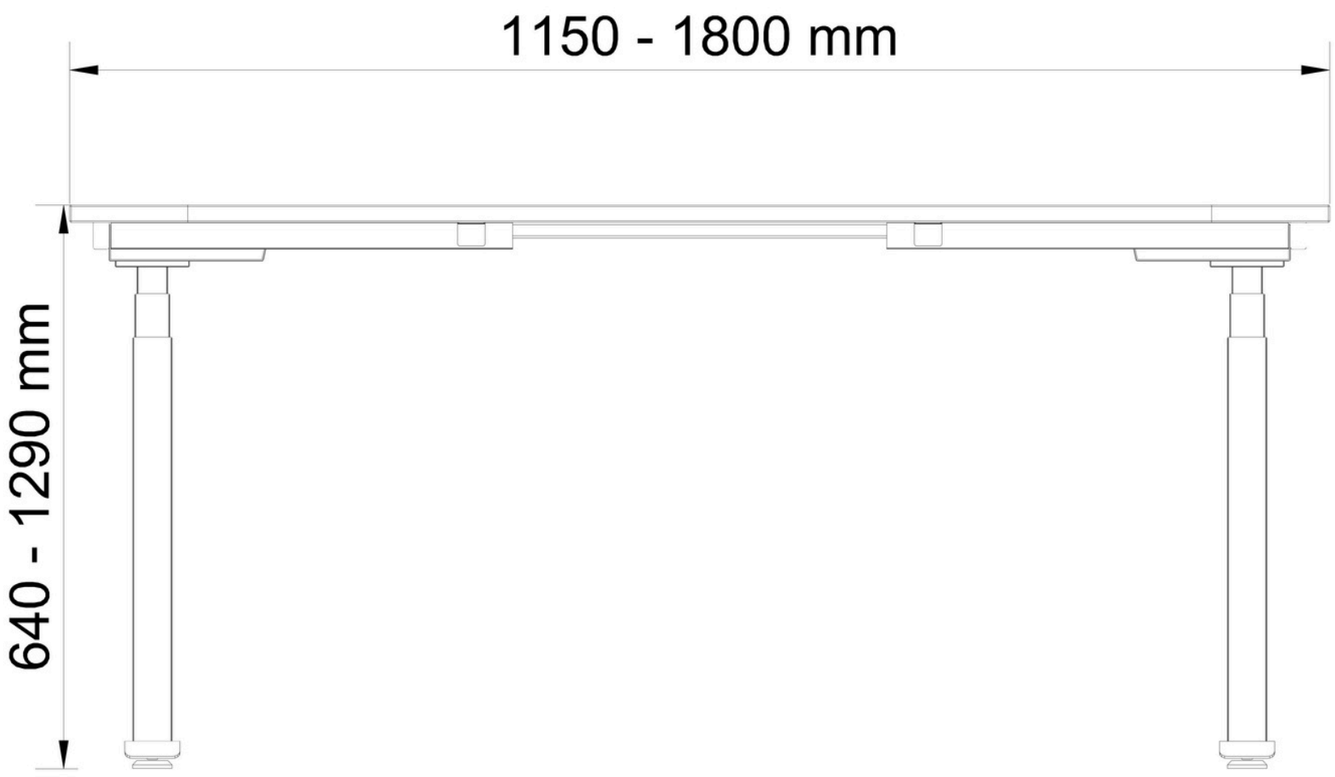

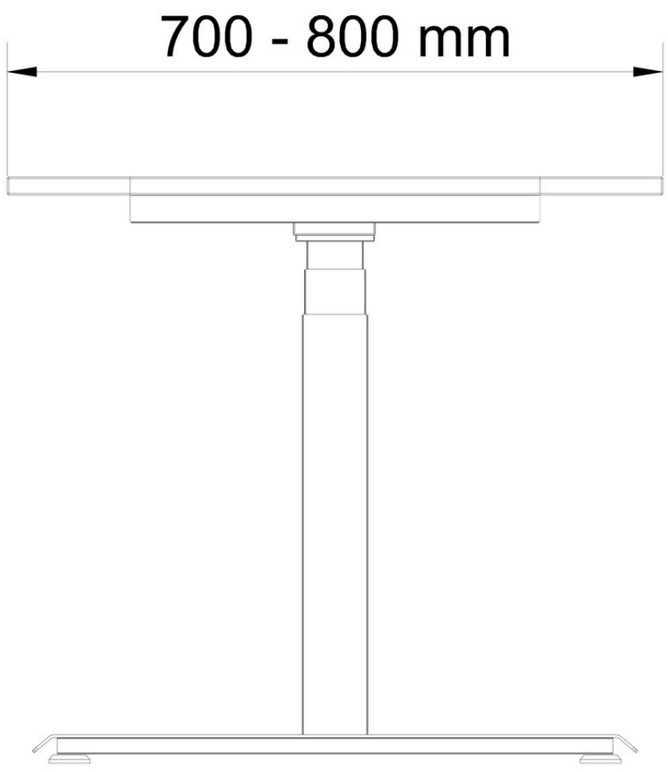

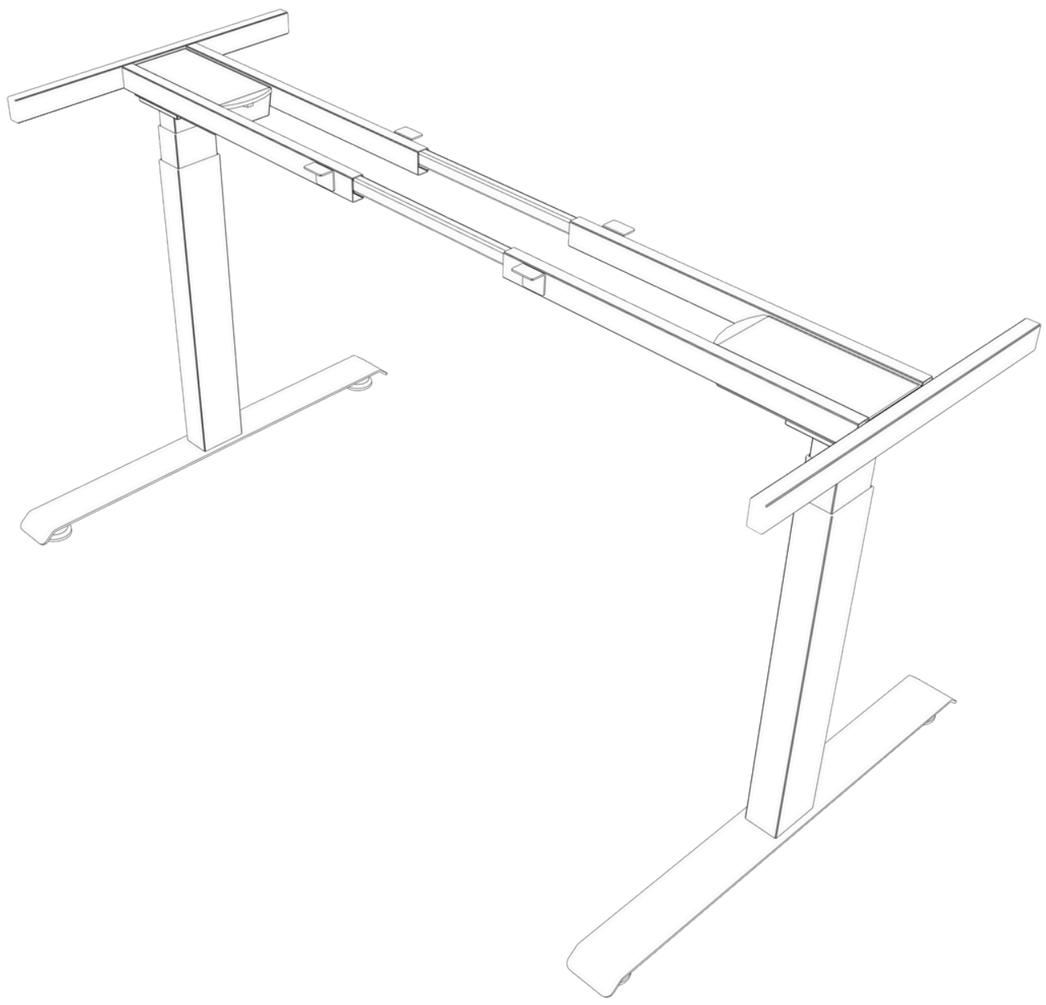

ASTRO

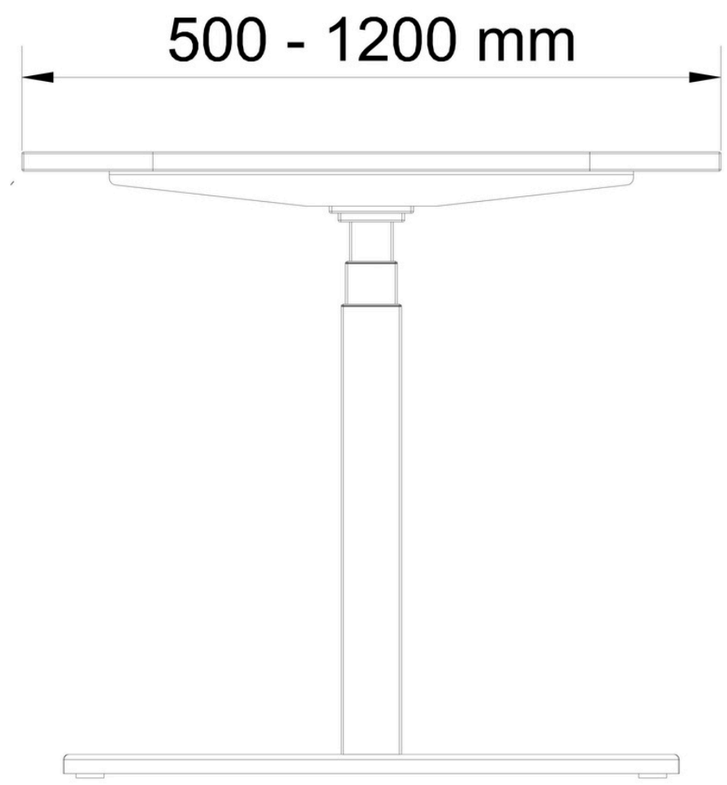

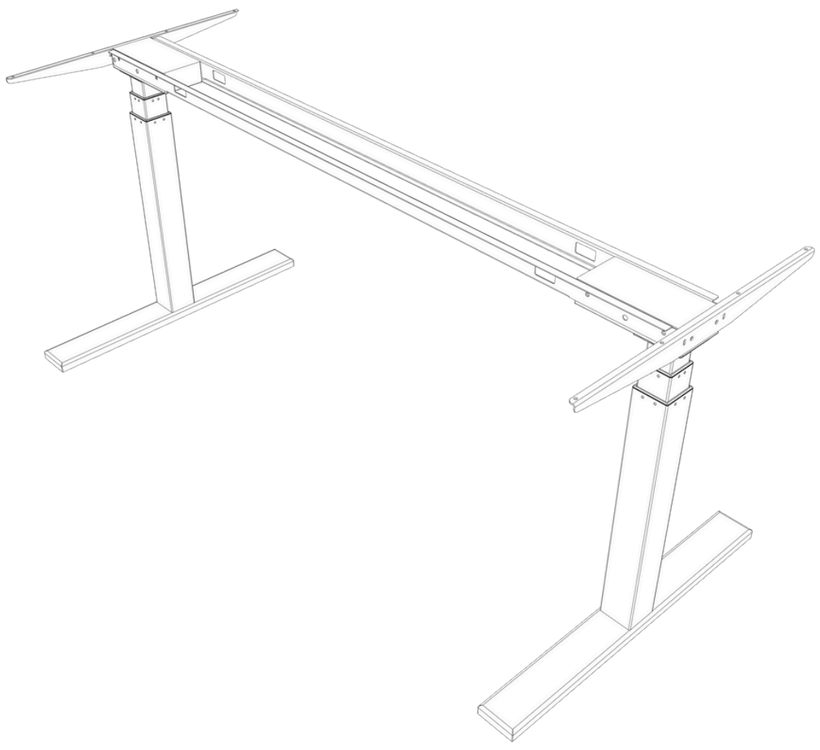

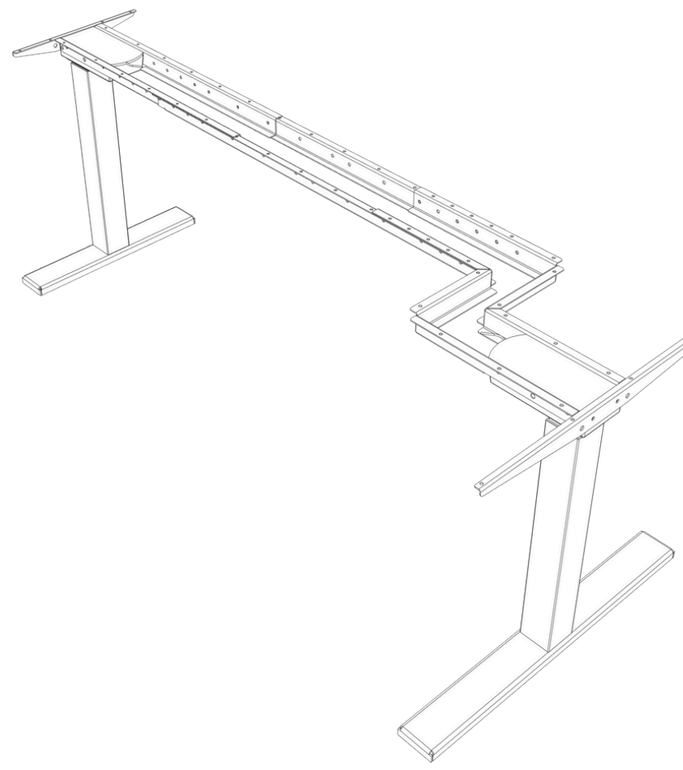

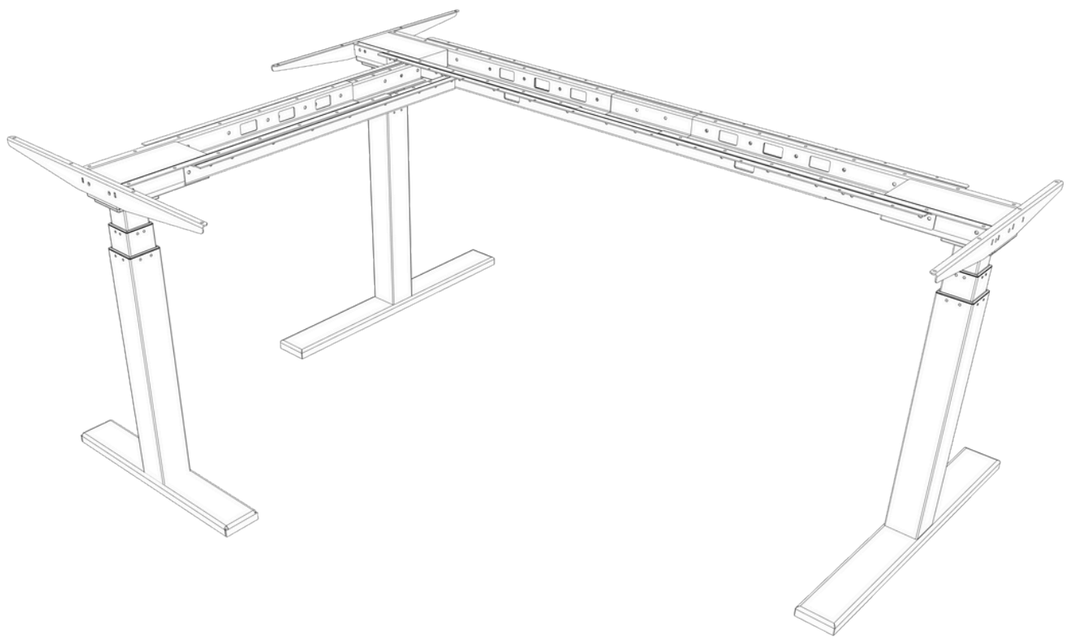
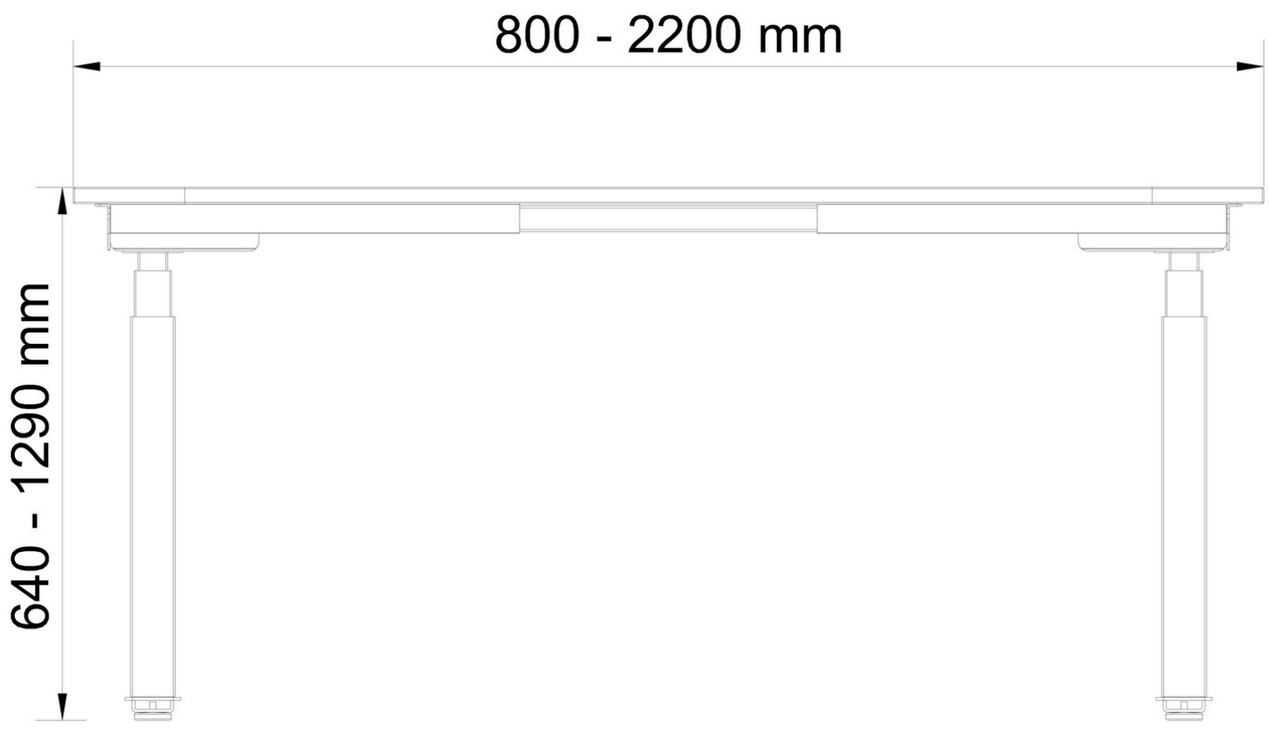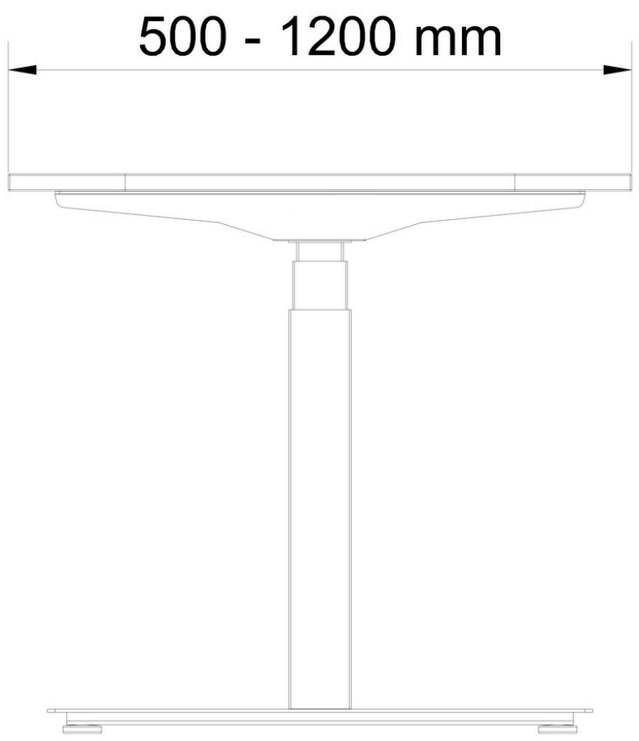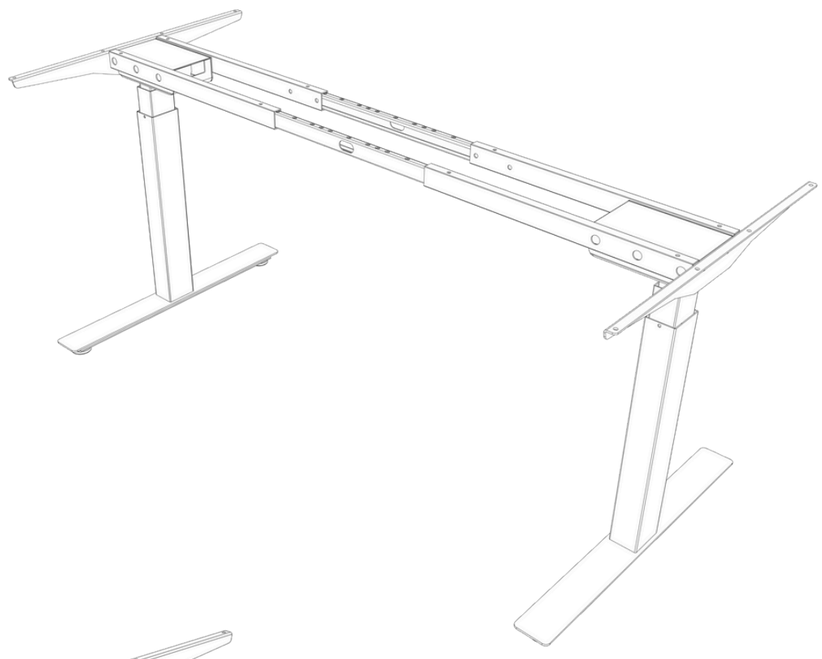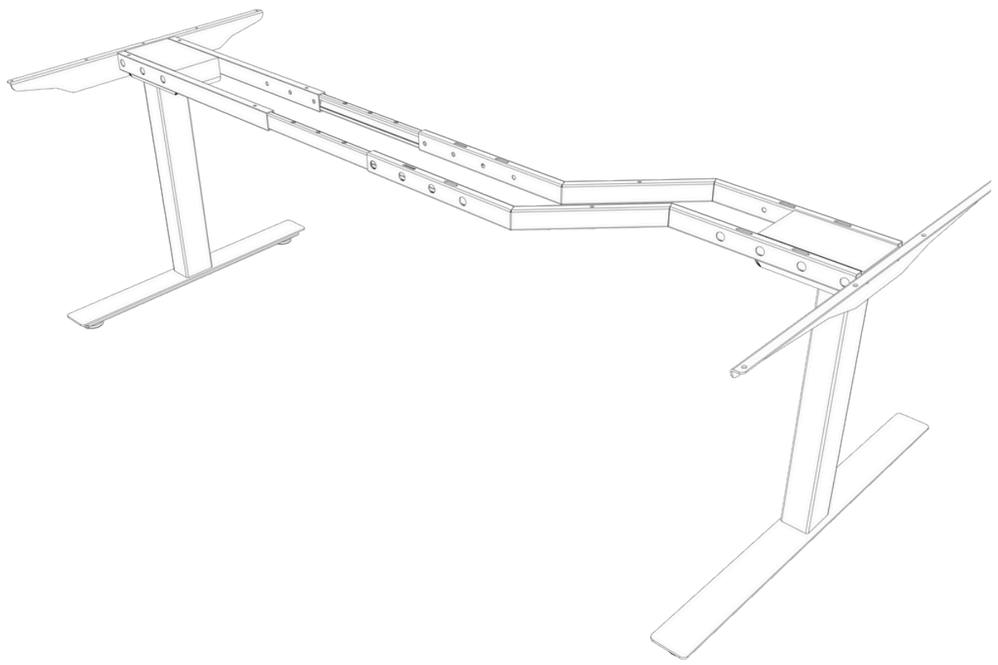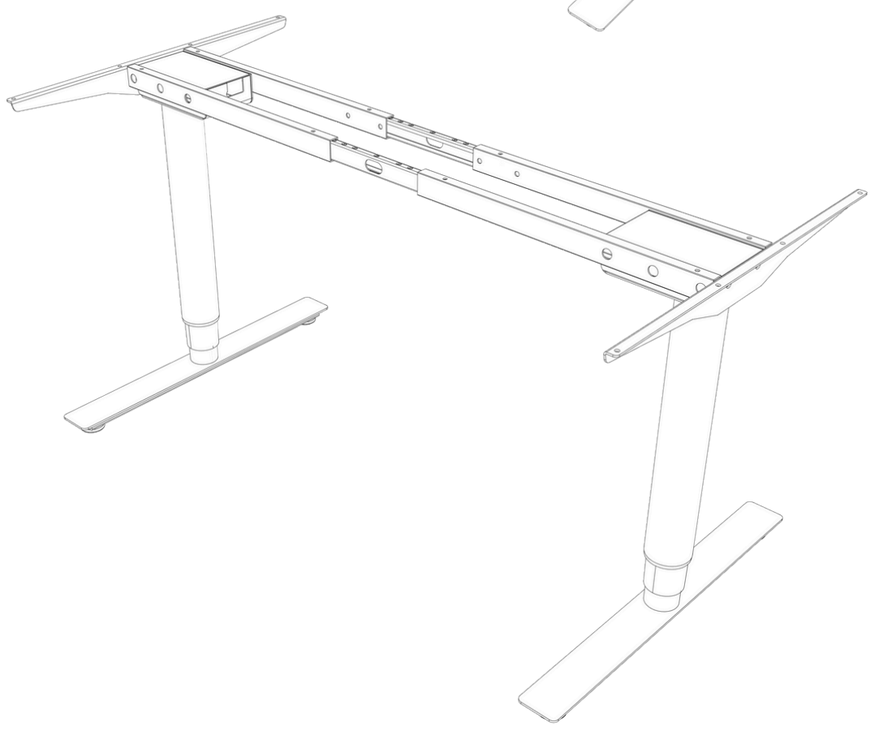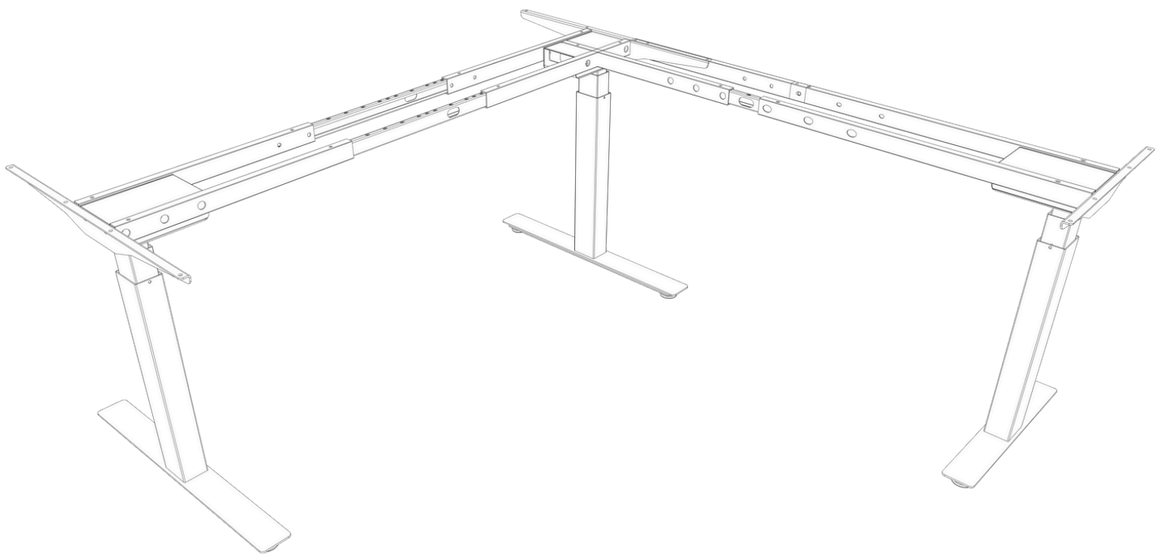
ROL ID