CHAT S

Meeting table

FSC
www.fsc.org
FSC® C117787
The mark of responsible forestry

Svenheim

PRODUCT INFORMATION

Create the ideal setting for collaboration and conversation with the CHAT S Configurator. Tailor your space step by step:

- Choose between bench, single-part, or two-part table options.
- Select from seven tabletop thicknesses.
- Match your style and durability needs with three material groups.
- Define the exact dimensions and finishes that suit your space.

Designed with both flexibility and style in mind, CHAT S makes it easy to create a social hub that feels perfectly at home in your environment.

TECHNICAL INFORMATION

Core material	MDF – 22, 25, 28, 38mm; Plywood – 21, 24mm; MFC – 22mm
Tabletop form	Rectangular
Edge and corners	Straight edge, 90° or 45° corners
Legs	The exact thickness of the core material, with or without wheels, with adjustable feet.

STANDARD DECORS

Veneer

Birch | Beech | Oak | Oak white pigmented | Ash | Ash white pigmented | Black stained ash

HPL

White | Grey | Anthracite | Black | Beech | Birch | Ash | Nano black

Linoleum

Mushroom DT4176 | Ash DT4132 | Pebble DT4166 | Charcoal DT4166 | Nero DT4023 | Smokey Blue DT4179 | Burgundy DT4154 | Leather DT4002 | Walnut DT4003 | Olive DT4184

Accessories

Wooden lid

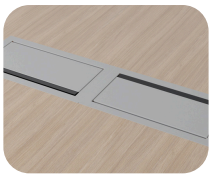

Metal hatch

Nomad Strip 05

Nomad Strip 03

Nomad Lamp

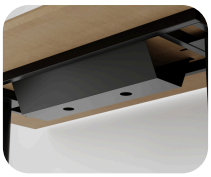

Cable holder

STANDARD MODELS

Bench

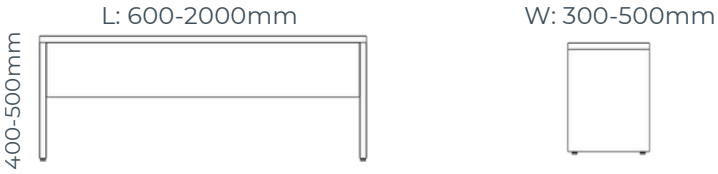

Bartable

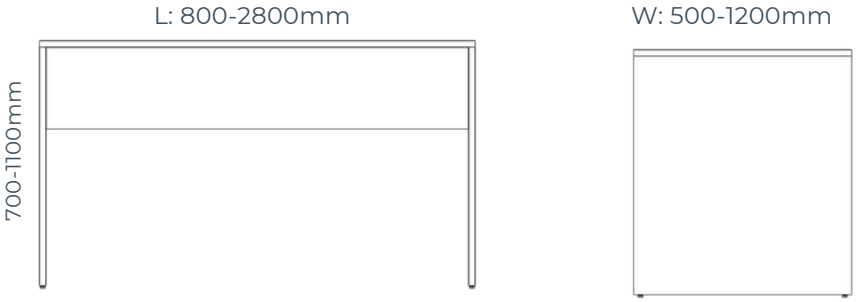

Bartable 2-divided

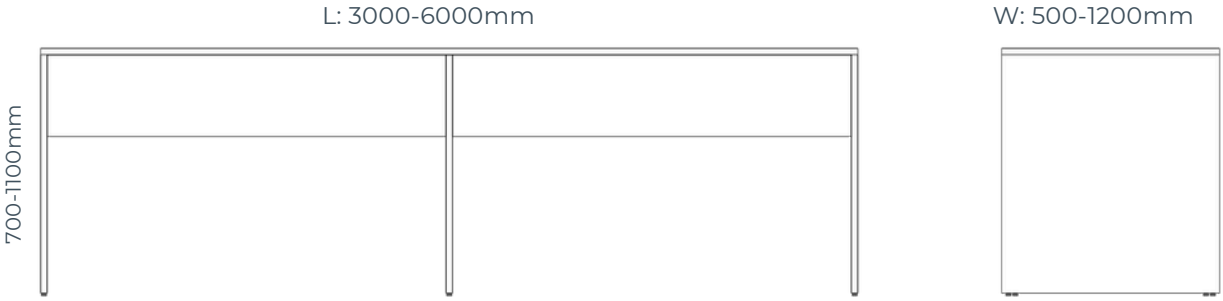

Sustainability

Svenheim follows the principles of the waste hierarchy, prioritizing prevention, reuse, and recycling, with disposal as the last resort. To minimize environmental impact, we continually implement solutions that reduce waste during the production phase. Remaining waste is handled in a way that maximizes its value, often being passed on to other companies for the creation of new products and keeping materials within the circular economy.

We design and manufacture furniture and interior solutions built to last. Durability is a core feature of our products, allowing them to be used and reused for decades.

Each product undergoes a Life Cycle Assessment (LCA), and we provide Environmental Product Declarations (EPDs) that disclose the environmental impact throughout the entire life cycle, from production and transportation to recycling or disposal.

Our products are certified to internationally recognized environmental standards, including the Nordic Swan Ecolabel and Mobelfakta. It ensures that our customers invest not only in quality and design but also in a responsible approach to the environment. Svenheim is a member of the return schemes Green Dot Norway for packaging and Eurovironment (Electrical return) for electrical components.

Quality assurance and warranty

Svenheim places high demands on quality—across raw materials, product development, order processing, production, logistics, and distribution. Our products are certified under internationally recognized quality management standards ISO 9001 and ISO 14001.

Choosing Svenheim means investing in furnishings that are easy to maintain, repair, and adapt to market needs, backed by clear and reliable warranty terms. We offer a 5-year warranty covering material and manufacturing defects.

Our Norway office is also certified with the Miljøfyrtårn (Eco-Lighthouse) label, reinforcing our commitment to environmental and quality responsibility.

We care about what we create today, as well as the world we leave for future generations.

Head office and production

Naujoji str. 132 LT-62175 Alytus, Lithuania

Email: info@svenheim.lt

Phone no: +370 315 76035

www.svenheim.no

FSC
www.fsc.org
FSC® C117767
The mark of responsible forestry