Svenheim

Chat table mounting/dismounting instruction

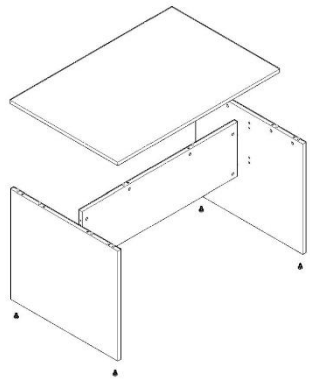

1. **Wooden parts :**
   Mounting : Wooden dowels to be added according to the illustration.
   Metal sleeve fittings to be used according to the illustration by screw driver.
   Dismounting : Metal sleeve fittings to be loosened by screw driver.
   Reg. screws to be removed manually.
   Replacement : separate parts to be replaced.

2. **Metal leg support :**
   Mounting :
   Metal support to be fixed with wood screws by screw driver.
   Dismounting :
   Wood screw to be loosened by screw driver and metal support to be removed.
   Replacement : Metal support to be replaced.

Svenheim
Naujoji str. 132 LT-62175 Alytus, Lithuania
www.svenheim.no
info@svenheim.no